This is a digital copy of a book that was preserved for generations on library shelves before it was carefully scanned by Google as part of a project to make the world's books discoverable online.

It has survived long enough for the copyright to expire and the book to enter the public domain. A public domain book is one that was never subject to copyright or whose legal copyright term has expired. Whether a book is in the public domain may vary country to country. Public domain books are our gateways to the past, representing a wealth of history, culture and knowledge that's often difficult to discover.

Marks, notations and other marginalia present in the original volume will appear in this file - a reminder of this book's long journey from the publisher to a library and finally to you.

Usage guidelines

Google is proud to partner with libraries to digitize public domain materials and make them widely accessible. Public domain books belong to the public and we are merely their custodians. Nevertheless, this work is expensive, so in order to keep providing this resource, we have taken steps to prevent abuse by commercial parties, including placing technical restrictions on automated querying.

We also ask that you:

+ *Make non-commercial use of the files* We designed Google Book Search for use by individuals, and we request that you use these files for personal, non-commercial purposes.

+ *Refrain from automated querying* Do not send automated queries of any sort to Google's system: If you are conducting research on machine translation, optical character recognition or other areas where access to a large amount of text is helpful, please contact us. We encourage the use of public domain materials for these purposes and may be able to help.

+ *Maintain attribution* The Google "watermark" you see on each file is essential for informing people about this project and helping them find additional materials through Google Book Search. Please do not remove it.

+ *Keep it legal* Whatever your use, remember that you are responsible for ensuring that what you are doing is legal. Do not assume that just because we believe a book is in the public domain for users in the United States, that the work is also in the public domain for users in other countries. Whether a book is still in copyright varies from country to country, and we can't offer guidance on whether any specific use of any specific book is allowed. Please do not assume that a book's appearance in Google Book Search means it can be used in any manner anywhere in the world. Copyright infringement liability can be quite severe.

About Google Book Search

Google's mission is to organize the world's information and to make it universally accessible and useful. Google Book Search helps readers discover the world's books while helping authors and publishers reach new audiences. You can search through the full text of this book on the web at `http://books.google.com/`

THE HILL KINK BOOKS

TOOLMAKERS' KINKS

COLVIN-STANLEY

Digitized by Google

Library
of the
University of Wisconsin

Digitized by Google

Digitized by Google

Digitized by Google

THE HILL KINK BOOKS

TOOLMAKERS' KINKS

Digitized by Google

THE HILL KINK BOOKS

Compiled by F. H. COLVIN and F. A. STANLEY
Associate Editors of the *American Machinist*

Each cloth, 4x6, illustrated, 50 cents postpaid

ORDER NOW

PRESS TOOL KINKS
SCREW THREAD KINKS
PATTERNMAKING KINKS
MILLING MACHINE KINKS
REPAIR KINKS
TOOLMAKERS' KINKS
JIG AND FIXTURE KINKS
DRILL PRESS KINKS
DRAWING ROOM KINKS
SCREW MACHINE KINKS

HILL PUBLISHING COMPANY

505 PEARL ST., NEW YORK CITY

6 BOUVERIE STREET, LONDON, E.C., ENG.

American Machinist — Power — The Engineering and Mining Journal

Digitized by Google

THE HILL KINK BOOKS

Toolmakers' Kinks

COMPILED BY

F. H. COLVIN AND F. A. STANLEY

Associate Editors of American Machinist

1908

HILL PUBLISHING COMPANY

6 BOUVERIE STREET, LONDON, E.C.

505 PEARL STREET, NEW YORK

American Machinist — Power — The Engineering and Mining Journal

Digitized by Google

COPYRIGHT, 1908, BY THE HILL PUBLISHING COMPANY

Hill Publishing Company, New York, U.S.A.

Digitized by Google

146783
OCT 5 1910
TDH
.C72
T

6931654

INTRODUCTORY WORD

THE kinks and other information given in this book have been selected from the experience of thoroughly practical men, as originally published in the *American Machinist*. This volume forms one of a series of this nature, aiming always to make available out-of-the-way information when most wanted. In this form the Kink Books, which can be kept in the tool-chest or the pocket, and always referred to, will, we feel, meet a demand and serve a good purpose.

F. H. COLVIN.
F. A. STANLEY.

NEW YORK, November, 1907.

Digitized by Google

Digitized by Google

TOOLMAKERS' KINKS

HOW TO KNOW STEEL

WHO has not often seen a machinist pick up a bar of metal covered with rust and dirt and wonder whether it was tool steel or machine steel. Now, there are a number of means of finding this out, but the emery wheel test, while not a particularly refined method (it will not tell you *everything* about a steel) is as quick and handy as any. To test a piece, touch it lightly against a dry emery wheel and observe the sparks as they strike the frame of the machine. A high-carbon steel gives a spark which apparently bursts into a brilliant star-like point of light when it strikes against anything. The spark from a low-carbon steel is, on the contrary, merely a dull, incandescent particle. It is said that all the air-hardening steels give a very red spark. By the way, some air-hardening steels can be greatly improved by heating to a bright

Digitized by Google

red and quenching in oil. In grinding after this care should be taken not to start the color.

A SPRING-ADJUSTED TRAM

As will be seen in Fig. 1, the principle of the fine adjustment is an old and tried one. The

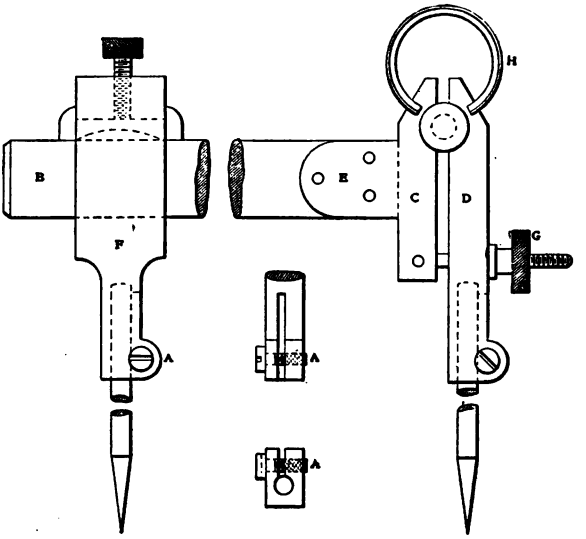

FIG. 1. — A Shop Tram.

tool might be called an extension spring divider. At *A* is shown a cheap and efficient method of

Digitized by Google

securing the points; they may be quickly removed for grinding or to be replaced by caliper points. The beam *B* is a piece of $\frac{3}{4} \times \frac{3}{16}$ cast steel, and the legs *C* and *D* are $\frac{3}{8} \times \frac{3}{8}$ machine steel. The leg *C* has a lug *E* projecting on one side which is slotted to take the beam *B*. These parts fit tightly and are fixed by $\frac{3}{16}$ inch rivets. *F* is the sliding point holder by which the trammel is set approximately to any length within the limit of the beam and accurately by the nurled thumb-nut *C* acting against the spring *H*. The whole combined makes a light and reliable tool.

TRAMMEL WITH MICROMETER HEAD

FIG. 2 shows a working drawing of a pair of improved trammel points. A section is shown through head *A*, which has micrometer adjustment; and head *B* is practically a duplicate of *A* with the threaded sleeve omitted. The points are held by means of a slotted sleeve, as shown, and can readily be replaced with longer points if the work requires, or a lead pencil can be substituted if desired.

Digitized by Google

The object of the micrometer adjustment is not for definite setting, but only to facilitate setting to a scale. For example, if we wish to set the points to $8\frac{1}{2}$ inches, and after locking

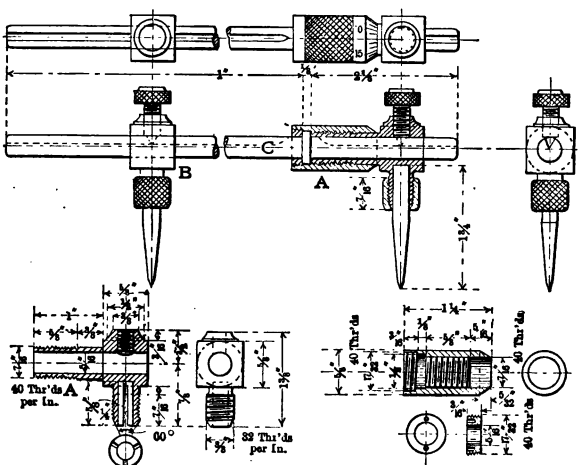

FIG. 2. — Trammel Details.

them by the nurled screws we find we are out seven or eight thousandths of an inch, it is then only necessary to release the nurled screw in head *A* and make the correction, which is quickly done. The bar *C* can be made any convenient

Digitized by Google

length and may be indefinitely extended by means of other bars with a socket at one end fitted with a conically pointed screw to fit the V-groove in bar *C*.

The details of the screw will be readily understood without further description.

A HANDY TWIST DRILL BOX

THERE are many devices for keeping twist drills, but Fig. 3 shows a case made some years

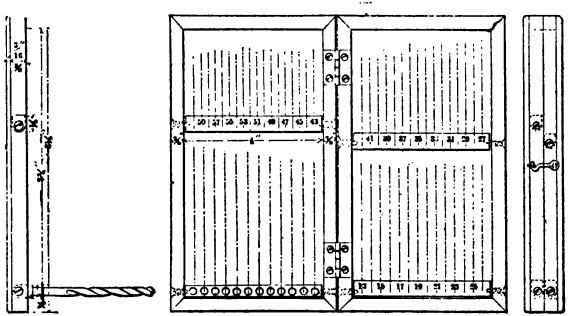

FIG. 3. — A Handy Drill Box.

ago for putting away in the tool-box when not in use. The middle view shows the box open.

Digitized by Google

It contains four drill holders with the numbers of the drills stamped thereon; they swing on pivots screwed through the frame of the box. The left-hand view shows one drill holder lifted up with a No. 1 drill in position to be taken out when wanted. The positions of the other drills are indicated by the center lines. At the right is shown a side view of box when closed. It will be found to be very handy.

SIMPLE ADJUSTABLE AND RENEWABLE GAGES

It is desirable many times in making gages to make them as cheaply as possible and still have good gages, and with this object in view we give sketches of two very good styles not in general use. The first cost of the gage, if made in the usual way, will be about the same or a trifle more, but where a number are required the handles can be made on the screw machine very cheaply, and when the gage has worn below size so that it has to be replaced, you have the handle left and only need to duplicate the gage.

Digitized by Google

Fig. 4 shows a good style for small plugs, also for reamers or screw-drivers, which are held by filing or milling out half the handle, also half the plug or whatever you choose to put in it. It should fit tight, with friction enough on the flat faces to keep it from dropping out and also fill the hole nicely. These gages are made on the

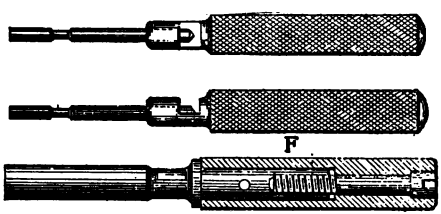

FIGS. 4 and 5. — Simple Renewable Gages.

end of a piece of drill rod, hardened and ground with the back left soft. This is found to be a very good way to make such small ones, as they are held in split chucks while being made, and are made very quickly.

Fig. 5 shows another style for larger and standard plugs, the handles being in proportion to the plug. The plug is held against the shoulder

Digitized by Google

by the screw in the end of the handle, and is kept from turning by the pin, as shown, making a very neat gage.

PROTECTING PLUG GAGE ENDS

THE accompanying sketches, Figs. 6, 7 and 8, show how the ends of plug gages may be protected from accidental bruises without detracting

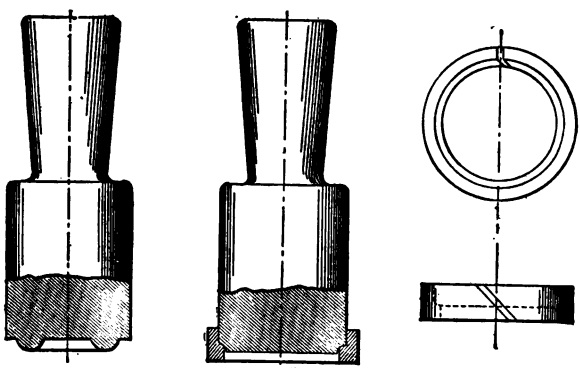

FIGS. 6, 7 and 8 — Protecting Plug Gages.

from their usefulness. Fig. 6 shows a projecting rim turned on the end about $\frac{1}{8}$ inch high. It serves to stand the gage on and protects it from

Digitized by Google

coming in contact with hard substances on the ground edge. Fig. 7 shows another method. In this case the bottom edge is reduced in diameter about $\frac{1}{16}$ inch about for $\frac{3}{32}$ inch deep, and a brass ring, Fig. 8, bored out $\frac{1}{32}$ inch less than the ground surface of the gage and having a saw cut made diagonally across one side, is sprung on. The ring has sufficient grip to hold it in place. These brass rings are very cheap to make and serve their purpose admirably.

A NEAT SURFACE SQUARE

THE sketch, Fig. 9, shows a surface square which speaks for itself; it weighs only 4 ounces and has, as represented, three working edges. A device which has proven itself very handy on close gage work is a small steel cylinder hardened, ground and lapped so as to stand square on either end. This takes the place of a surface square for round work, it being given a fine coat of unprepared builders' chalk (which can be had at any hardware store) when scraping two surfaces together. The chalk is far better and cleaner to

Digitized by Google

handle than the blue or red preparation now generally used. A few drops of machine oil are placed on a piece of glass and the red chalk rubbed over it; this forms a red paint which does

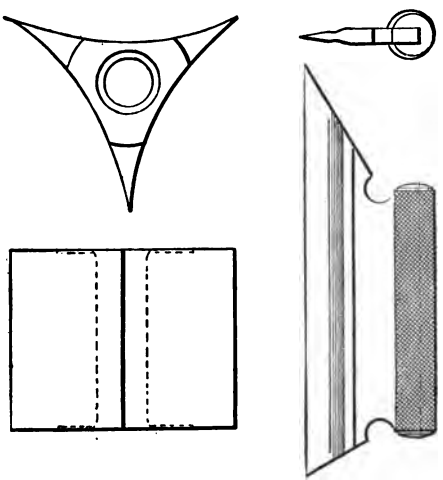

FIGS. 9 and 10. — A Surface Square and a Straight-Edge.

not have that sticky nature which the ordinary red and blue have.

Fig. 10 illustrates a very neat and simple straight-edge having grooves milled in the sides

Digitized by Google

and brought down to a knife-edge. It is very handy in many places.

ADJUSTABLE V-BLOCK

FIG. 11 is a sketch of an adjustable V-block, which has been found very handy by some tool-makers. The sliding part *A* can be in the position shown or shifted to the top ledge *c*, according to

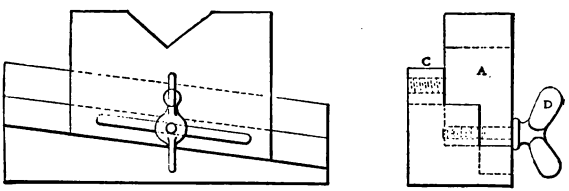

FIG. 11. — Adjustable V-block.

the hight required. Intermediate hights can be obtained by adjusting the sliding part, which is held in position by the thumb-screw *D*. The idea can be modified to suit different classes of work.

A HANDY SETTING TOOL

IN Fig. 12 is shown a very handy tool for sizing snap gages; for setting shaper and planer tools to

Digitized by Google

hight; for setting surface gages, and also for numerous other purposes. This tool was designed so that every part, excepting the scale, could be hardened, ground and lapped. Other tools have been made on much the same principle, but on most of them the sliding block was dovetailed to the body, this one point alone necessi-

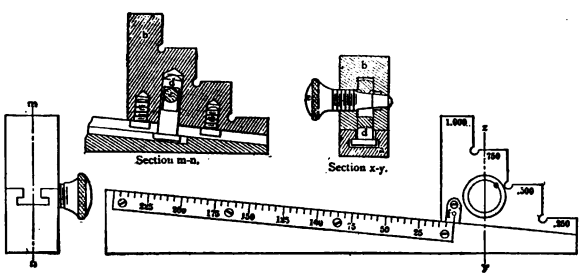

FIG. 12. — Handy Setting Tool.

tating the whole tool being left soft, as it is impossible to grind and lap a small dovetail accurately.

The body *a* of this instrument is made of tool steel, it being 3½ inches long. Into the top is milled a small T-slot, and at the side is inserted a small scale graduated in hundredths; this scale

Digitized by Google

is $2\frac{1}{2}$ inches in length, thus giving 250 divisions, each one of which is equivalent to 0.001 inch rise in the sloping top; or, in other words, there is just $\frac{1}{4}$ inch difference between the thickness of the body at the zero line and at the other end of the scale. After the body is machined it is hardened, ground and lapped. To this body is fitted the tool steel sliding block *b*, the bottom of which is perfectly flat, thus enabling one to lap it to a true surface. To guide it and hold it in perfect alinement with the base the two screws *c* are screwed into it, the heads of these being lapped off to a sliding fit in the T-slot. The block is locked in position by the bolt *d*. In this bolt is an elongated slot through which passes the binding screw *e;* when the latter is screwed inward the taper portion draws the bolt up tight, clamping the sliding block fast to the base. The steps milled in the block are four in number, each of the upper three steps being $\frac{1}{4}$ inch in hight, and the lowest, when set as shown, being $\frac{1}{4}$ inch above the bottom of the tool. Thus the tool measures $\frac{1}{4}$, $\frac{1}{2}$, $\frac{3}{4}$ and 1 inch when set at the zero line; and with the $\frac{1}{4}$-inch

Digitized by Google

up-and-down movement along the incline the tool has a range of from ¼ to 1¼ inches in thousandths. The sliding block is hardened, and lapped on the four steps as well as at the bottom. The plate *f* on which the zero line is p'aced is fitted in a small pocket milled out at the side of the block, and, should the tool ever show wear, it can be re-lapped and a new zero plate fitted, as the re-lapping would necessitate a new zero line.

The method of reading this tool is, of course, very simple: Should you wish to set the tool at .437 inch, get the zero line on the sliding block in line with the 187th division on the scale; this will give you .250 + .187 = .437 inch — necessitating the use of the step marked .250. You would with this setting obtain the following sizes from the four steps: the lowest would give as stated .437, the next .687, the third .937, and the highest 1.187 inches. The drawing shows the scale graduated in twentieths of an inch; it should be in hundredths.

Digitized by Google

SPACING CENTER PUNCH

Of all the spacing center punches which toolmakers have made from time to time, Fig. 13 is

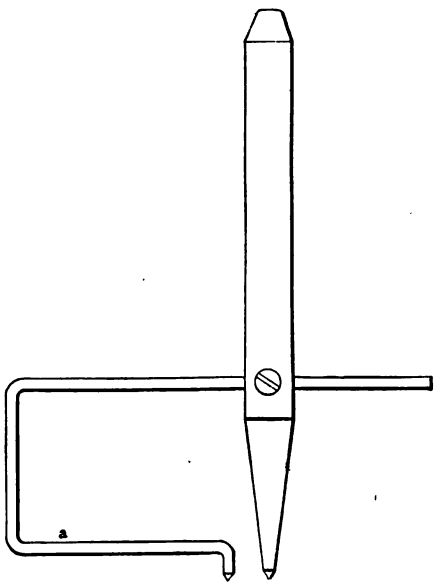

Fig. 13. — Spacing Center Punch.

one of the simplest we have seen and there seems to be no reason why this should not be both handy and accurate.

Digitized by Google

The only effect of the blow on the punch will be to spring the spacing wire at *a*, which should not affect the spacing when once set.

DIVIDERS FOR SMALL CIRCLES

FIG. 14 shows a pair of spring dividers for small circles which have been in use over ten

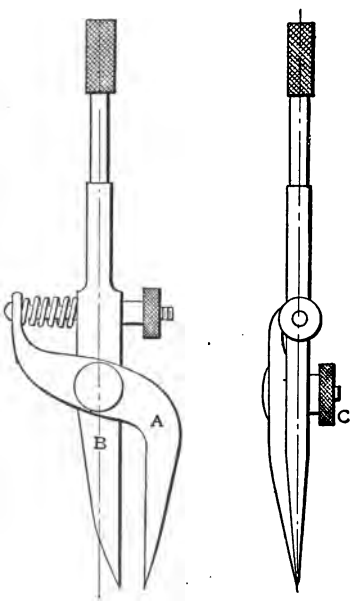

FIG. 14. — Dividers for Small Circles.

Digitized by Google

years and are easy to make. They are not dependent on a slot fit for rigidity, the most essential feature in a small divider, and may be clamped solid by nurled nut *C*. Part *A* is offset at both ends to coincide with center line of *B*. This construction insures a good bearing surface at point of contact and does away with slot; they might be further improved by placing an adjustable needle point in *B*. These dividers were made for fine work and will scribe circles from $\frac{1}{64}$ to $\frac{5}{8}$ inch diameter without staggering.

CENTER INDICATOR FOR LATHE

FIGS. 15 and 16 show an indicator for centering work on the face-plate of the lathe. By placing

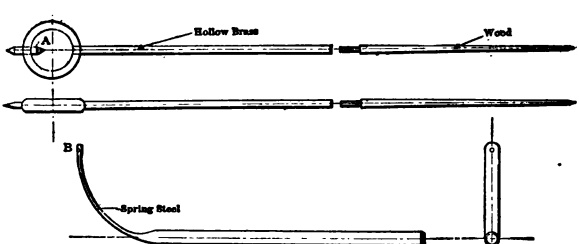

FIGS. 15 and 16. — Indicator for the Lathe.

Digitized by Google

the spring, Fig. 16, in a boring tool-holder and then hooking the indicator point *A* into the center *B* in the spring, the ring falls over the spring and forms a simple universal joint. The one shown is of a special light construction which obviates all vibration. The work can readily be centered to less than 0.001 inch. It is made in two pieces, as shown, to go in the tool-box easily.

A TESTING TOOL FOR FINE WORK

THE sketch, Fig. 17, shows a very fine tool for testing work to 0.0001 inch and less;

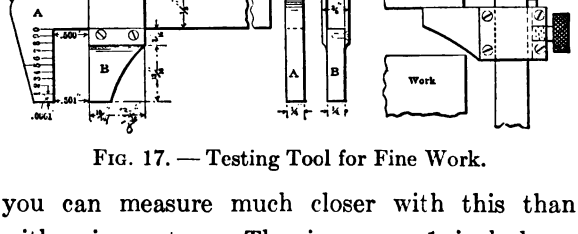

FIG. 17. — Testing Tool for Fine Work.

you can measure much closer with this than with micrometers. The jaws are 1 inch long, are .001 inch farther apart at the point than at

Digitized by Google

the back, and the fixed jaw is graduated in tenths on one side; thus variations of 0.001 inch or less may be detected in work placed between the jaws. Say we have a piece to test, like the one shown in the sketch, to see if its faces are perfectly parallel; move the jaws down on the work, say at 4, 5 or 6, and try all four corners and see if they come to the same point. If they do, the piece is exact. If not, whatever it is out is plainly shown by the graduations.

Anyone with fine work to do will appreciate this tool. We had a lot of pieces to grind that had to be exact. We thought we could grind them close enough with micrometers, but could not, so we made one of these tools and it worked fine; you will be surprised to see how closely you can measure with it. This tool must be hardened and ground all over.

A HANDY SCRIBER

THIS scriber, Fig. 18, was designed several years and has been found very handy for both parallel and circular work, particularly for scrib-

Digitized by Google

ing bolt centers on round and square flanges of valves, pipes, etc.

It will scribe any distance from $\frac{1}{16}$ to $3\frac{1}{2}$ inches, and the scribing point may be firmly fixed in any

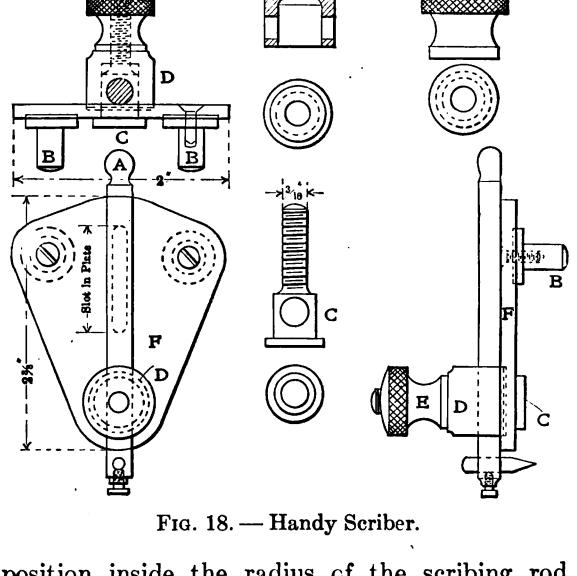

FIG. 18. — Handy Scriber.

position inside the radius of the scribing rod. By placing the rod parallel with the guide studs, the scriber point is in advance of the body of the tool, which makes it possible to scribe a line

Digitized by Google

to the very edge of a casting, while the studs have a firm guide on the work. For short distances the scriber point may be placed in the slot indicated by dotted lines in frame *F*. When folded up it makes a very neat and compact tool.

The scriber rod *A* is made from ¼ inch round tool steel, and a flat is filed on one side to prevent it turning in the hole. A ⅛-inch hole is drilled in one end for the scriber point, which is fastened in position by a small screw, as shown. The frame *F* is made from 2 x ⅛ inch sheet steel, and is drilled and counterbored to receive studs *B B*, which are secured by small screws, as shown; this enables the studs to be hardened and replaced easily. In the opposite end, the frame is drilled to receive stud *C*, and counterbored to suit bush *D*. A hole is then drilled through both stud and bush, to receive scriber *A*, care being taken to drill the hole in such a position as to allow the flat part of scriber rod to work freely upon the top of the frame.

The rod is held firmly in any position by tightening the nurled nut *E* upon bushing *D*, which is made to "clear" the bottom of the

Digitized by Google

counterbore slightly in order to give the necessary "draw" upon the rod.

A TOOLMAKER'S SCRATCH BLOCK

HERE is a toolmaker's scratch block which was made some years ago and fills all the requirements. There are only two or three like it that we know of, and they were made by men that worked in the same shop.

Fig. 19, *A* is the body or block, which is bored to receive the shaft *B*, to which is keyed the worm gear *C*, this being held against the shoulder by the sleeve *J*, which screws into the block just far enough to take a bearing on its outer shoulder and still let the worm gear and shaft work easily without end thrust. The shaft *B* also shoulders in the block at *M*, and when the nut *I* is tightened on the sleeve *J* the gear and shaft must be free to turn without end play. *H* is a washer, or rather two half washers, drilled when together to receive the pointer *K*, the thumb-nut *G* binding the pointer and at the same time bringing the back of the washer against the shoulder on *B*,

Digitized by Google

which is just flush with the face of the block, but not allowing the washer to bind on the block.

The shaft, gear, washer, pointer and all, now being free to turn, after being set very near and

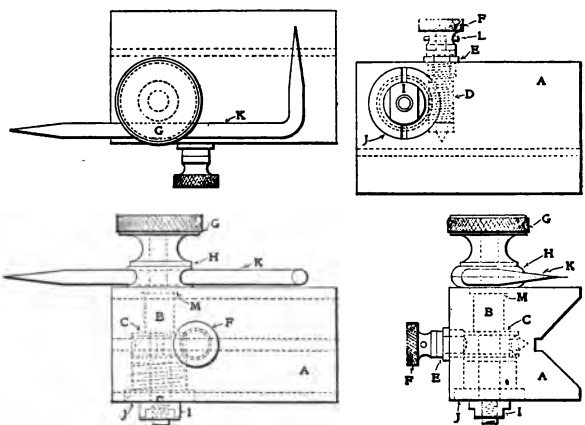

FIG. 19. — A Toolmaker's Scratch Gage.

before the pointer is tightened, may be worked as desired by the worm *D*, the end of which fits into the conical bearing *O*, and is held in position by the sleeve *E*, which screws into the block and against the shoulder on *D*, so that it will turn

Digitized by Google

easily without any end play. The nurled head F is pinned by the taper cross-pin L to the worm. The worm wheel was made with a $\frac{1}{4}$-inch, 24-thread master tap in the lathe. Any one wishing to make a scratch block will find this to be a very good one.

A HANDY SCRATCH GAGE

In the making of templets there is often found a need for a scratch gage that could be set within a thousandth of an inch, and the sketch, Fig. 20, shows the tool made to meet the requirement.

By the aid of this tool, lines can be scribed on a templet at a given hight from the surface plate, and by using an angle plate lines can be placed at right angles to one another, thus giving very often all the principal points from which other lines, arcs and circles must be laid out.

In setting the arm, use inside micrometers for measurements above three inches and inside calipers for shorter measurements.

The nut A is threaded at the top to twenty pitch and at the bottom to forty. This gives a

Digitized by Google

movement of 0.025 inch per turn of nut and allows a fine adjustment. There is also a coil

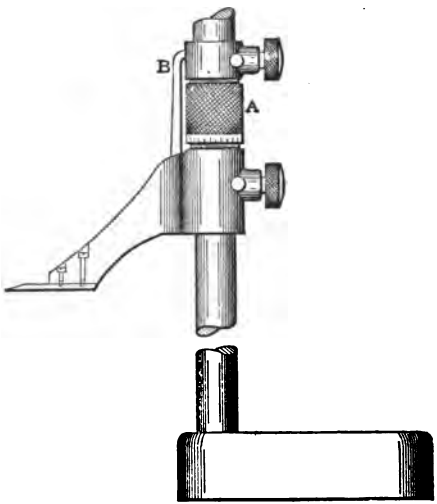

FIG. 20. — Handy Scratch Gage.

spring inside the nut to give a positive motion to the arm. The finger *B* prevents the arm turning when adjusting to hight.

Digitized by Google

UNIVERSAL SURFACE GAGE WITH MICROMETER ADJUSTMENT

A MACHINIST or toolmaker who takes pride in his kit of tools has some particular instrument that he takes pleasure in showing up to his fellow-workmen as something out of the ordinary. Nine times out of ten it is a surface gage — one perhaps he made when an apprentice.

The general principle of the gage in Fig. 21 can be seen at a glance: there is a micrometer adjustment for the needle, and in tilting the spindle, as shown in the upper sketch, the level comes in play as before and the reading in thousandths in a vertical line can be taken with precision; or, if desired, the needle can be reversed by swinging half round, bringing the thumb-screw at the bottom, when the level comes in play again the same as before.

Digitized by Google

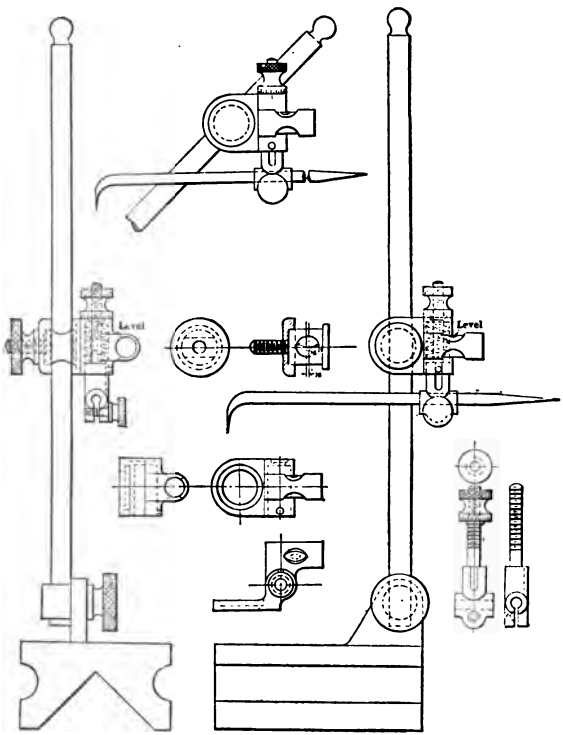

FIG. 21. — Universal Surface Gage with Micrometer Adjustment.

Digitized by Google

SPECIAL OPERATIONS IN MAKING MILLS AND COUNTERBORES

We had 500,000 pieces of a kind to make and each of these pieces had a slot milled across the face. The slot was $1\frac{1}{2}$ inches long, $\frac{1}{2}$ inch wide and $\frac{1}{4}$ inch deep. When taking the finish cut we used a cutter made in two parts. The teeth were *dodged* — that is, every other tooth on the face of the mills going together was cut away, so that the tooth remaining on the face of the opposite half of the mill dodged to the recess made by the cutting away of the tooth. This is a very common form of mill for the purpose mentioned, as it can be shimmed apart after grinding, to make the slot any desired width within its range, yet not leaving any fin, as would be the case were two ordinary flat cutters put together.

The mill worked very nicely, but was costly. One of the men suggested making an arbor having two sets of centers, one set the regular centers and the other offset $\frac{3}{16}$ of an inch, on opposite sides of the center of the arbor.

Our cutter blank was to be placed on this

Digitized by Google

arbor or mandrel as nearly central as possible, one side to be faced on the regular centers and the opposite side to be faced on the eccentric centers. When both pieces that were to make up our cutter had been machined in this fashion the angling surfaces were placed together, the thick edge of one to the thin edge of the other, and a $\frac{3}{16}$-inch hole was drilled through both for a pin. The cutter thus put together was then splined and the teeth were cut. After hardening it was ground and it was then ready for use. The cost of making was much less than for a cutter with dodged or interlocking teeth, and it gave as good satisfaction. It could, of course, be shimmed apart and still have the teeth, or some of them, long enough to leave no fin on the work. Fig. 22 shows two views of the cutter, the dividing line being at *x*. Fig. 23 shows the mandrel with the eccentric centers used in facing and turning the cutter.

It is sometimes desirable to use a hollow mill having a pilot, as in Fig. 24, in place of a counterbore when enlarging a hole that is to go entirely through a piece, and especially is this true when

Digitized by Google

the stock being cut is not very thick. If a counterbore is used in cutting through thin stock it is liable to run when the remaining stock becomes too thin to support the pilot, unless the face of the counterbore is made as shown in Fig. 25, and even if made of this shape it is difficult to grind.

The commonly expressed objection to using a hollow mill for this class of work is that the piece of stock removed has a tendency to stick in the mill. This can be overcome, however, by making the clearance hole in the mill eccentric to the outside. As this does not require exactness, the eccentricity may be given by putting the mill — after the hole for the pilot has been finished and the outside turned to size — in an independent jawed chuck, throwing the jaws over so that the outside of the mill runs from $\frac{1}{100}$ to $\frac{1}{64}$ inch out of true, and while thus chucked boring the clearance hole to the required size and depth. The teeth should now be cut. It is advisable to cut them of a form that allows them considerable depth and yet leaves them strong. This form of tooth is shown in Fig. 26. The teeth may be

Digitized by Google

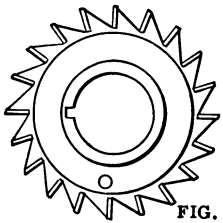

FIG. 22

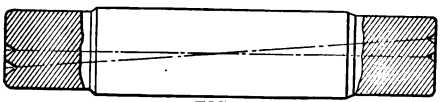

FIG. 23

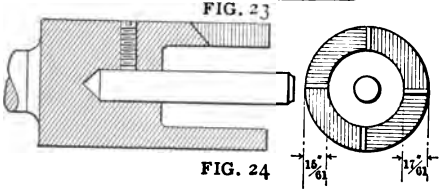

FIG. 24

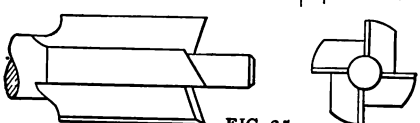

FIG. 25

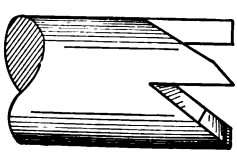

FIG. 26

Special Operations in Making Mills and Counterbores.

Digitized by Google

backed off for cut, and the mill is then ready for hardening.

Care should be taken when heating not to heat very much above the teeth. When the proper heat has been attained the mill should be inverted and hardened in the bath with the teeth *up*, and it should be worked up and down rapidly in the bath in order to force the contents of the bath into the hole.

Better results always are attained if this method of dipping is adopted with pieces having holes running *part* way through them, as then the steam can escape and the water can enter the hole; whereas if dipped with the opening down, steam which generates rises in the hole, and as there becomes more steam than the hole can contain it escapes from the bottom and blows the water from the teeth, not allowing them to harden properly. Vapors generated in the bath are a source of annoyance often overlooked by inexperienced hardeners, and probably cause as much trouble as any one thing.

Digitized by Google

MICROMETER GAGES

FIG. 27 shows an assembled view and the details of a micrometer surface gage, which, if accurately made, is equal and often preferable to the vernier now so generally used, which has an attachment to the sliding jaw. One of its advantages is that when the measurement is taken it can be readily discerned without straining the eyes. It is as easy to manipulate as the regular micrometer.

In the details, part *a*, which is the body of the instrument, is made of tool steel. The diameter of its lower end is $\frac{9}{16}$ inch, and on this portion is cut a 30-to-the-inch thread to fit the base *b*. The body is bored out in the center, so that the scriber will slide freely; the threaded end is cut with a 45-degree counterbore to form a bearing for a cone fitting the end of the micrometer screw. A slot $\frac{1}{8}$ inch in width begins $\frac{3}{16}$ inch from the threaded end and extends to the other end of the body; in this slides the movable scriber *c*. There are 88 divisions along the side of this slot, these being 0.025 inch apart, thus giving the tool a range of 2 inches for outside and 2.2 inches for

Digitized by Google

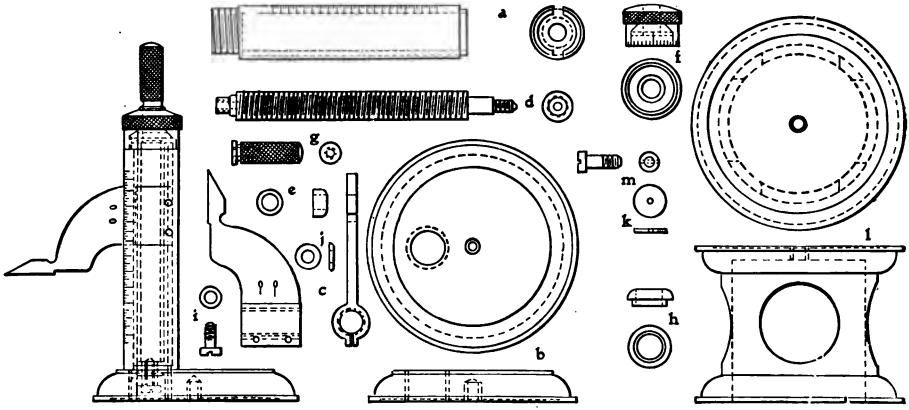

FIG. 27. — Micrometer Surface Gage.

Digitized by Google

inside measurements. The screw *d* is the most essential part of this tool, and its construction requires great accuracy. Its diameter is $\frac{3}{8}$ inch, and it is provided with a 20-to-the-inch thread. On the shorter of the two reduced ends fits the cone *e* which is hardened and ground, the curved part acting as the lower bearing of the screw and fitting in the conical seat formed in the body *a*. On the other end fits the barrel *f* and also the speeder *g*. The barrel is graduated in fifty divisions, each division representing 0.001 inch, and inside of the barrel is formed a 45-degree bearing which rides on the cone *n*, the latter being held stationary at the end of the body. Thus it will be seen that both ends of the micrometer screw are carried by cone bearings, allowing the screw to run easily. The sliding scriber *c* is made of tool steel, hardened, ground and lapped; and combined with it is the micrometer nut which is drawn to a spring temper. This nut is split and adjusted by two screws to compensate for wear. On the scriber are two zero marks that show at a glance the outside or inside measurement taken. The screw and the washer (marked

Digitized by Google

i and *j*) go on to the end of the micrometer screw and may be tightened to take up the end play. To make a neat appearance the cap *k* is driven into place over screw *i* in the counterbored hole; this cap has a small hole in the center by which it may be caught in taking apart. The adjustment of the tool is accomplished by loosening the speeder *g* and turning the barrel as required on the screw, the speeder then being tightened again and the barrel locked. The block *l*, which is 2 inches high, is used by placing the surface gage on top of it and fastening with a screw *m* in the center. Two holes 1 inch in diameter are drilled horizontally through the center at right angles, and one $1\frac{3}{4}$ inches in diameter by $1\frac{3}{4}$ inches deep from the bottom to make the block light and neat in appearance.

Fig. 28 shows a form of micrometer that has proved very handy for measuring snap gages and thicknesses, using respectively the outside and inside of the measuring surfaces. The instrument shown in Fig. 29 makes a convenient hight gage for getting the distance from base to shoulder on a piece of work, and may be used to advantage

Digitized by Google

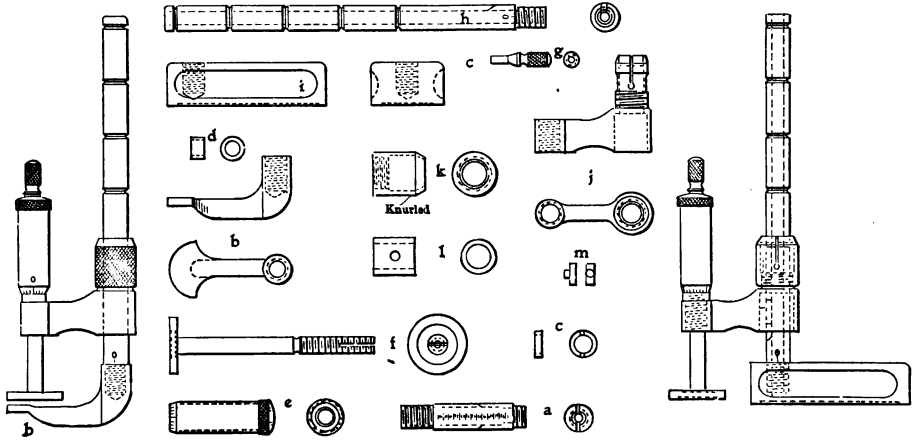

FIGS. 28 and 29. — Micrometer Measuring Instruments.

Digitized by Google

when setting tools on the planer or shaper. As may be seen in the drawing, there are two sets of figures for the graduations on the sleeve *a*, giving the measurements obtained from the outside and inside of the measuring disks. These disks and also the plate *b* for the micrometer, Fig. 28, are 0.10 inch thick, so that the range of this micrometer is .8 and 1 inch for outside and inside measurements, respectively. The sleeve *a* is made of tool steel and counterbored from one end to within $\frac{1}{2}$ inch of the other end, which is threaded on the inside to form a nut for the micrometer and is threaded taper to receive the adjusting nut *c*. The sleeve has two slots (cut 90 degrees from the graduations) and may be adjusted by nut *c* to compensate for wear. The bushing *d*, which is hardened, ground and lapped, is fitted tightly in the counterbored hole. The barrel *e* is the same as a regular micrometer barrel, and is graduated in 25 divisions, each division representing .001 inch. The micrometer screw and disk are in one piece, as shown at *f*, and the barrel fits on the threaded end, which is tapped out to receive speeder *g*. This speeder

Digitized by Google

serves to hold the barrel in position. The screw is $\frac{1}{4}$ inch in diameter cut 40 per inch; the disk and threaded portion are hardened, ground and lapped. To adjust the tool, loosen the speeder *g*, turn the barrel as required, then lock the barrel by tightening the speeder again. The rods *h* are bored out in the center, and threaded at one end to fit the base *i* and the part *b*, and may be of any desired length. These rods have small 45-degree grooves cut into them at intervals of one inch. Part *j* at the upper end forms a split chuck (spring tempered) which is clamped fast to the rod by turning the nurled cap *k*. From the bottom up to the split chuck the body is counterbored $\frac{5}{8}$ inch and the bushing *i* driven in tight; the other end is bored and tapped out to receive the sleeve *a*. The bushing *j* is hardened, ground and lapped, and through the side is drilled a $\frac{1}{8}$-inch hole for the key *m*, the shank fitting tightly in the hole, while the key proper is a sliding fit in the slot milled in the rod.

Digitized by Google

GRADUATIONS FOR MICROMETERS AND SCALES

FIG. 30 shows a micrometer caliper with special graduations.

The idea is to make the graduations direct reading, to avoid the liability to error in reading

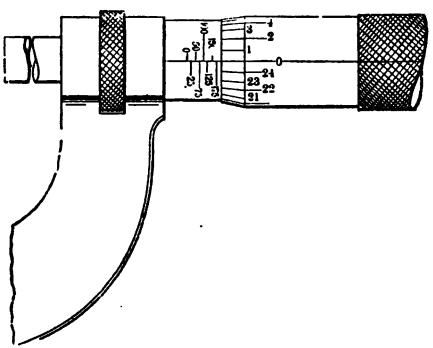

FIG. 30. — Direct Reading Micrometer.

the ordinary divisions. The sketch will show clearly how this result is obtained by staggering the figures, which otherwise it would be impossible to stamp in a space of 0.025 inch.

The staggers can be so arranged that there is

Digitized by Google

0.100 inch for each number, which is better than in the scheme shown.

We need hardly enlarge on the difficulty of reading sixty-fourths on an ordinary scale. With the staggered arrangement, they can be made direct reading, as shown in Fig. 31, but do not know that any of these have ever been made.

Some have been trying unsuccessfully to get a

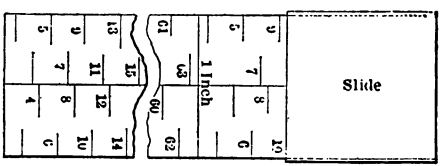

FIG. 31. — Proposed Graduation for Machinists' Scale.

micrometer made with a screw 32 threads to the inch, and 32 divisions on the thimble, thereby giving all usual divisions of an inch by halves, from $\frac{1}{2}$ inch to $\frac{1}{1024}$ inch, or one sixteenth of $\frac{1}{64}$ inch, which is near enough to 0.001 inch for most work (only one-fourth of 1 per cent. out), and is readily understood by mechanics who often "split sixty-fourths."

Digitized by Google

TRUING STRAIGHT-EDGES

HAVING three straight-edges to true up, 14 feet long, about 3 or 3½ inches wide and ⅜ inch thick, we used a long bench on which we screwed down three hardwood chairs, Fig. 32. It will be noticed, as shown in section, that the slots to receive the straight-edge are twice as wide as the thickness of the straight-edge, to allow for a hardwood wedge to be driven in while filing and scraping. These chairs were leveled up as true as possible, and on trying the straight-edge with the proof-staff, as they came from the planer, we found that some edges were slightly rounding and others hollow. After filing and scraping to a fair bearing we found on trying with verniers that they were higher in the center about .01 inch. After trying to overcome this by shimming up the ends we found the error the other way, hollow in the center, and could not get them reasonably true.

Then we tried the plan of Fig. 33. This certainly balanced up the weight of the straight-edge and overcame the sag, having as much overhang at both ends as was in center. This gave an

Digitized by Google

equal distribution of weight and put a different complexion on the surface, showing us then where the error was, and when brought down to a true surface the straight-edges measured true enough for all practical purposes.

A short time after we had two more to do and

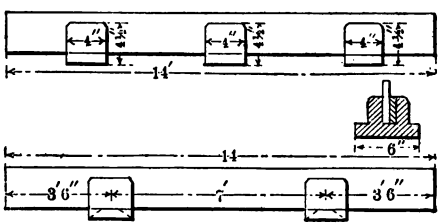

FIGS. 32 and 33. — Supporting a Straight Edge.

tried the well-known plan as followed in truing surface plates, using three edges, truing 1 to 3, 3 to 2, 1 and 3, 1 and 2, 2 and 3. This method gave excellent results, showing up errors not noticeable where using the proof-staff only. This may not be the best possible method, but it was successful in doing a good, practical job.

Digitized by Google

A DEPTH GAGE

FIG. 34 shows a depth gage recently constructed that embodies some new ideas. The blade is one of Starrett's narrow rules ¼ inch wide. The beam is made with wide base, as shown, and graduated. The blade sets in the cross channel or the long channel of the beam, and is fastened by the head of the bolt pressing the side of it, a device familiar in this class of tools.

Fig. 35 shows the method of using this gage in narrow quarters, such as slots or with two sizes of holes, by changing the rule from the cross channel to the long channel, the binding screw and nut being moved to *A*.

In Fig. 36, when applied to the chamfer on a shaft, an equal amount of stock being taken from the corner in each direction, the reading can be taken from the blade and from the beam.

Fig. 37 is a piece of steel the same thickness as the rule. This is inserted in the cross channel when the tool is used as shown at Fig. 38.

In Figs. 39 and 40 the beam is shown provided with blades for convenience in filing hexagon or

Digitized by Google

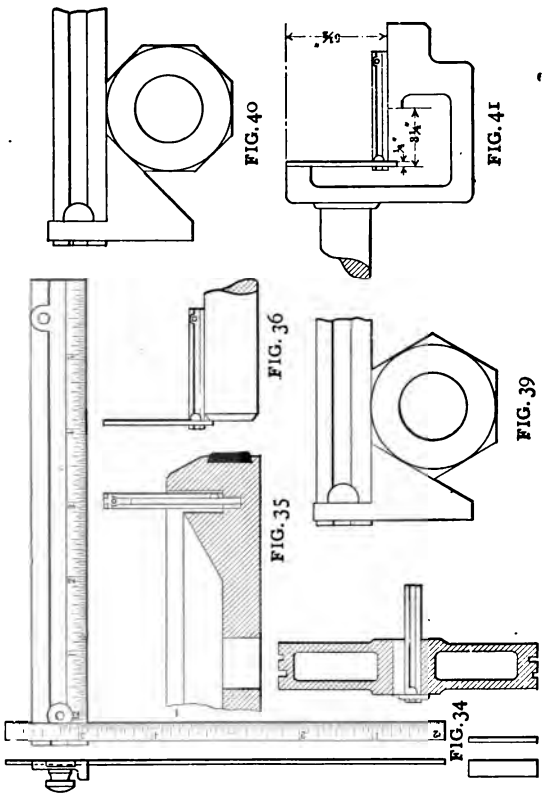

A Depth Gage and Some of its Applications.

Digitized by Google

octagon shapes. These blades are held in position by the thumb-nut and screw the same as the long blade. Another application is shown in Fig. 41.

DEPTH GAGE

HERE in Fig. 42 is a simple depth gage made of sheet metal. The body *A* consists of two

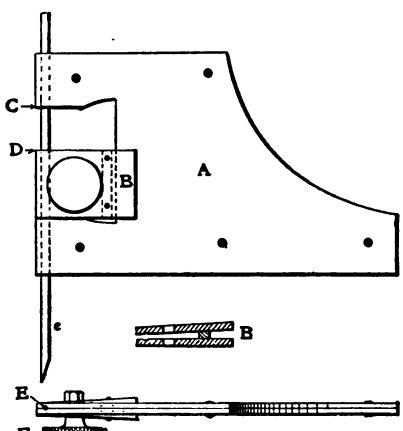

FIG. 42. — Depth Gage.

pieces of steel about 14 gage, riveted together. A hole is drilled at *E*, a "slip fit" for wire *e*.

Digitized by Google

B is made of two pieces of the same gage metal, with a small piece (the thickness of *A*) riveted between, as shown in the sectional view. The thumb-nut *F* binds *B* on to *e*. An important feature is the movement of *B*, from *c* to *D*, that enables the user to hold the gage square at the time the slot or hole to be gaged is nearly finished.

A HANDY DEPTH GAGE

THE accompanying sketch, Fig. 43, shows a handy depth gage especially adapted to die-sinkers' use. Referring to the sketch, *a* is a frame of steel about $\frac{1}{16}$ inch thick, which may of course be made to any shape which suits the eye; and *b* is a piece of drill rod which is held in place by the stud *c* and binding bolt and nut *d*, while *e* is a piece of ordinary scale which is fastened in place by two screws or rivets, as shown.

The shoulders on *c* and *d* are turned past the edge of the wire hole, about one-quarter of the thickness of the hole, and the wire *B* is filed away, as shown in section *f*, sufficiently to allow

Digitized by Google

it to pass freely through the hole when the studs are in position, *d* being turned slightly more than *c*, so that it will bind the wire when the nut is tightened. The level on the edge of the frame brings it in line with the point of the wire, which

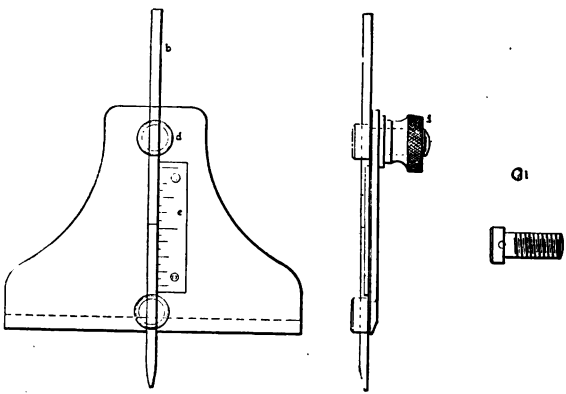

FIG. 43.—Handy Depth Gage.

allows the gage to be rocked, which is a decided advantage over the old-style gage.

A convenient way to use this gage is to place the frame over the hole to be gaged and push the wire to the bottom, and read as with an ordinary caliper.

Digitized by Google

The zero mark on the wire should be made by grasping in a chuck and marking with a tool before the wire is filed away.

To make a gage like this will give the machinist a good excuse for buying a new scale, for he can cut an inch section out of a scale which is badly worn, and trim off the rounded edge to bring up the graduations, which makes it as good as a new scale for this purpose.

ATTACHMENTS FOR THE HIGHT GAGE

THE sketches, Figs. 44 to 47, show some accessories to the hight gage which have proved themselves worthy of a place in the machinist's kit. The description will be of interest to and serve to make the hight gage better known, as it deserves to be.

Fig. 44 is a scriber longer than the one that comes with the tool. With it we have frequently scratched lines on work and taken measurements that would have been inaccessible with the regular scriber. Fig. 45 shows a scriber of a different form; its chief advantage is in being able to put

Digitized by Google

lines on to a piece of work clear down to the plate on which the work rests, while with the straight scratch one would need to set the work on parallels to accomplish this. And right here we would like to say that for laying out dies, such as blanking, perforating, etc., the hight gage with its scriber is unexcelled, and no one who has become accustomed to doing this class of work in this way would willingly get along without it. The arm in Fig. 46 is designed to caliper under projections, bushings, etc., located close to the table, *a* being the calipering surface, although it would be well to have *a'* ground true also, so the tool could be reversed and used upside down if necessary. In Fig. 47 are shown a long parallel strip and a square which adapts it to the movable jaw of the hight gage; in this case an extra clamp must be provided. The strip is shown resting on top of a bushing inside a jig. We first let it rest on the surface plate and take the reading of the vernier, and then the reading as it rests on the bushing; the difference will be the hight of the top of the bushing from the plate, and in this way the relative hights of

Digitized by Google

bushings, bosses and gage points inside a jig or similar piece can readily be found. This vertical strip can also be used to increase the capacity of the measuring tool in hight. Other combinations and ways of adapting these attachments will

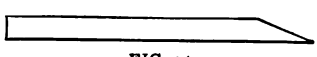

FIG. 44

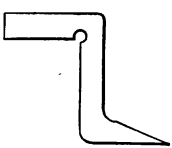

FIG. 45

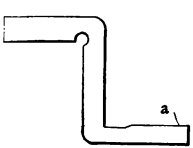

FIG. 46

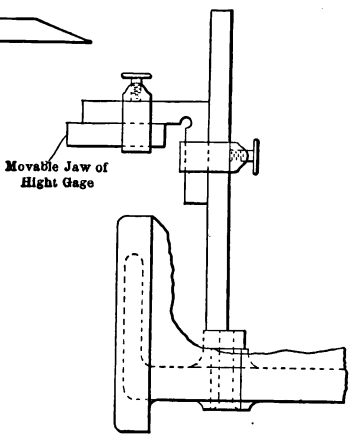

FIG. 47

Attachments for the Hight Gage.

suggest themselves as occasion arises. In taking measurements as explained above, greater accuracy can sometimes be obtained by adjusting the contact surface of the measuring tool so that a piece of tissue paper can just be drawn between

Digitized by Google

it and the work. In using the tissue paper at each plate where a measurement is to be taken, no deduction for the thickness of the paper need be made.

ADJUSTABLE GAGE FOR LATHE CENTERS

HERE is a sketch of a taper gage made twenty years ago. The value of the gage has been proven many times, when an old stub of a lathe

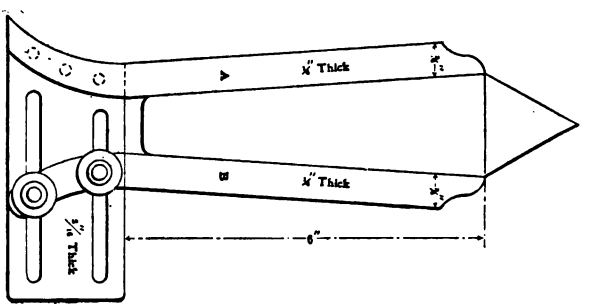

FIG. 48. — Adjustable Taper Gage for Lathe Centers.

center has come from some lathe in a shop a mile away. In the years that it has been used in turning lathe centers it has been possible to always guarantee a perfect fit the first time.

Digitized by Google

By placing the center between the blades, Fig. 48, holding the blades firmly on both sides of the center, closing the gage so that the blades will rest the entire length of the center, then screwing the thumb-nuts firmly down, the gage is adjusted and can be removed. After the first chip is taken from the piece of steel which is to make the new center, try it in the gage and it will tell you whether the tailstock is set right for the taper required.

TAPER GAGE

A VERY serviceable taper gage can be made by altering an ordinary bevel square. A V-strip is

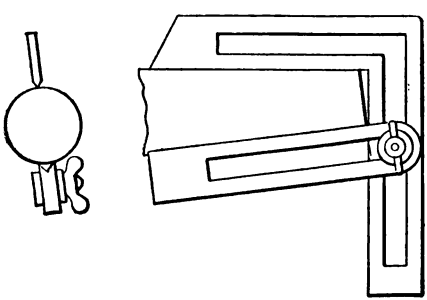

FIG. 49. — Taper Gage.

Digitized by Google

placed in the swinging blade, as the sketch shows; shape out the base of the tool to an angle of about 90 degrees, put in a blade with two long shanks, and you have a bevel square and taper gage combined.

HOLDERS FOR SMALL TOOLS FOR THE BENCH LATHE

HERE are drawings of three different styles of tool-holders for the bench lathe for holding small tools made from drill rod. Fig. 50 shows a holder with a hole in the end to receive the tool, which is held by the screw. It should be a fairly good fit in the hole. Fig. 51 is another type, which has a V-shaped slot milled in the side for the tool to lie in. The pin or clamp *A* has a hole through it large enough to accommodate several sizes of drill rod, and acts as a clamp by tightening the nut *B*. *C* is a key for tightening the nut *B*, and it is always at hand by being placed in the end of the holder.

It is held either by two or three threads, cut near the shoulder, by a spring from the top or

Digitized by Google

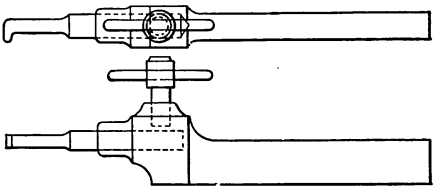

FIG. 50

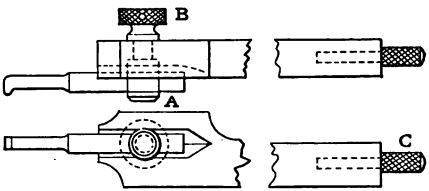

FIG. 51

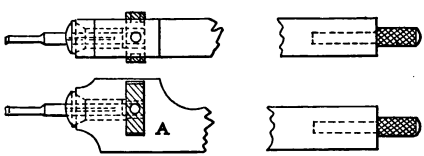

FIG. 52

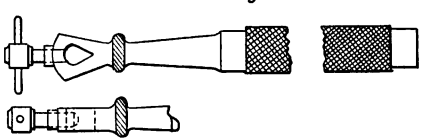

FIG. 53

Holders for Small Tools.

Digitized by Google

by any one of several other ways which might be mentioned. Fig. 52 will represent still another style, the tools here being held in small split chucks which are tightened by the nut *A*, drawing the chuck into the taper and tightening as usual. Any one of these chucks makes a very handy tool such as most toolmakers like to have in their kits. Fig. 53 shows a very neat and useful little holder or dog for holding twist drills while drilling work in the lathe. It is also handy for reamers and can be used for small taps, etc.

TOOL-HOLDERS FOR SMALL WORK

THIS holder, the tools for which are made of drill rod (all of the same diameter), may be used in either bench lathes or the larger lathes.

Fig. 54, which is a side view of this tool and holder, plainly demonstrates the utility and simplicity of the same. *A* is the nut which, when screwed on to *B* (the threaded end of the base) draws the bushing *C* against the shoulder *a* and causes it to close around the shank of the tool, thus holding it firmly in place. The bushing *C*

Digitized by Google

is a spring bushing sawed or milled in three places, as shown at *b*. Fig. 55 is a top view of the base of the holder, and shows the groove *c* in which the tongue *d* of the slide rests. Fig. 56 is a view of the bottom of the slide showing the tongue *d*. These two parts shown in Figs. 55

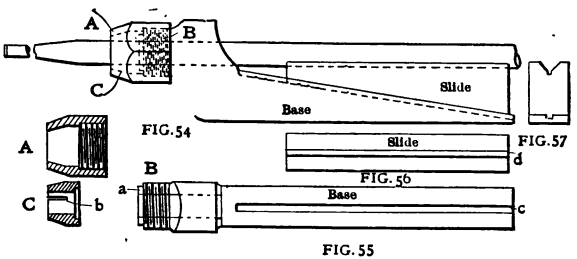

A Tool-holder for Small Work.

and 56 are milled on an angle of about 5 degrees, thus allowing the slide to move easily.

Fig. 57 is an end view of the slide and base, showing the tongue *d* and the groove *c*. The top of the slide has a V-shaped groove to hold the tool central. There may be several bushings made to accommodate tools of various sizes.

Digitized by Google

INSIDE MEASURING DEVICES FOR SMALL HOLES

An inside micrometer is often needed to measure holes smaller than 1½ inches. We have spent much time in thought on this subject, and several plans have occurred to me. For instance, one might have two points screwing into one another like the ordinary inside micrometer, as in Fig. 58, but with no graduation. After setting to fit the hole, we would then measure them with an outside micrometer. Another idea which struck us as possible was a thing like a glove stretcher, as in Fig. 59. This could either be fitted with a direct reading arrangement or could itself be measured. On the whole, however, we believe the most promising idea is that illustrated in Fig. 60. Here we have two semi-cylinders cut slightly on the skew. By having these arranged to slide over one another, and possibly dovetailed together, it would be possible to make minute adjustments, and the diameter could then be measured by the outside micrometer, or the faces could be graduated as in the sketch. We have

Digitized by Google

long wanted an inside micrometer which would give us the bore of, say a 1-inch hole within two or three ten-thousandths; it would be invaluable

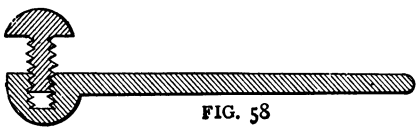

FIG. 58

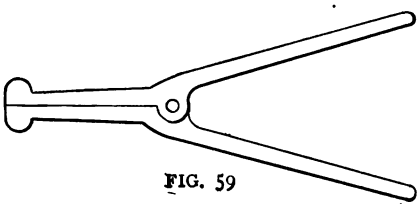

FIG. 59

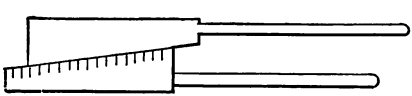

FIG. 60

Inside Measuring Devices for Small Holes.

for limit gage work, to know how much, for instance, the size of a rose reamed hole in brass differed from one in gray iron.

Digitized by Google

A TOOLMAKER'S CLAMP

FIG. 61 shows a sketch of a toolmaker's clamp, which requires no explanation. It is better than the old style as to quick adjustment, and as the

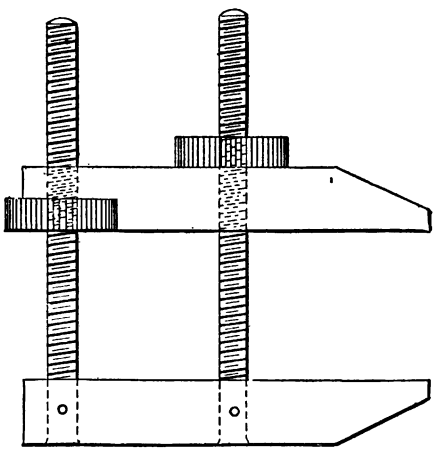

FIG. 61. — Toolmaker's Clamp.

screws project only on one side, it can be used in many places where one of the old style could not.

Digitized by Google

ADJUSTABLE TOOL FOR LOCATING HOLES IN JIGS

THIS adjustable fixture, or drilling jig, will be found useful, not only as a lazy man's tool, but as a real time-saver as well. The tool was originally designed for laying out and drilling holes in jigs, particularly in those cases where, in place of figures, the workman is given a sample piece and expected to reproduce the holes perfectly enough for the product to fit the original machine. We have also found it handy when one of those hurry jobs comes to us that must be fairly accurate and where time is an important factor; for the device may be set, a temporary bushing or stud made, and the piece drilled in this manner in less time than the same amount of work can be done in any other way we know of.

The fixture, Fig. 62, is composed of a plate or quadrant *A*, to which is rigidly fixed, by means of screws, the short arm *B*. The long arms *C* and *D*, which are movable, are secured to the quadrant by means of short bolts, and slotted as

Digitized by Google

shown in the sketch, the under side of each slot being counter milled or recessed to keep the bolts from turning and give a flush surface to the jig

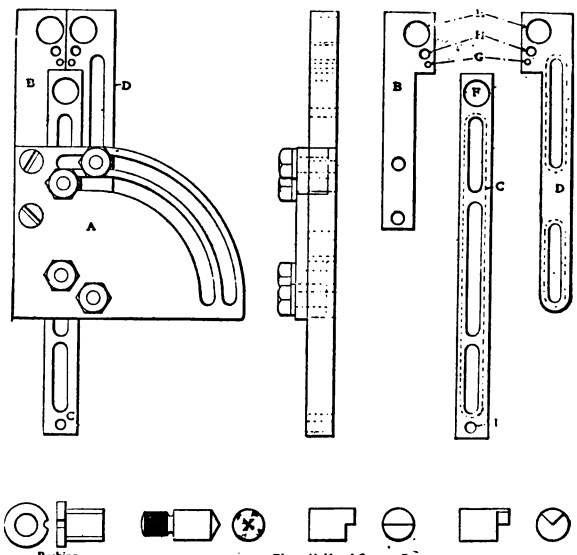

FIG. 62. — Adjustable Device for Locating Holes in Jigs.

when assembled. These arms are interchangeable, and adjustable to any position desired. The holes *E* in *B* and *D* and *F* in *C* are the ones generally used. In the fixture we are using these

Digitized by Google

holes are standard $\frac{1}{2}$ inch; the greatest distance between their centers being, approximately, 8 and 9 inches, and the least $\frac{5}{8}$ and $1\frac{1}{8}$ inches. If it is desired to use the fixture for a center distance less than the above, the smaller holes *G*, *H* and *I* must be used, reducing the center distances to a little less than $\frac{1}{4}$ and $\frac{1}{2}$ inch. A set of hardened bushings with holes ranging in size from $\frac{7}{16}$ inch down as small as the usual work may call for, as well as a set of studs, should be kept with the jig.

To use the tool, a standard plug is inserted in two or more holes, as the case may require, the arms are opened to the necessary distance by a micrometer, or the angle found by means of the bevel protractor; the nuts are carefully tightened and the center distance is again tested. If still found correct, the standard plugs are removed and bushings which should be made a hand fit and kept from turning by a small pin or screw passing through the flange, are placed in the jig which is now ready for use.

Where one or more holes are to be drilled from one already located, it is necessary to use a stud,

Digitized by Google

one end of which fits the hole to be located from, the other fitting a hole in the jig. When more accurate work is required than can be obtained by drilling, we use this fixture for locating buttons on the work, placing the buttons, which are ½-inch diameter, in the holes in the jig, and using them as bushings for drilling their own screw holes. The buttons are then screwed fast to the work, the jig is removed and it is found that very little adjustment is necessary.

Many odd attachments will become connected with a tool of this nature, such as blunt center punches, square-end studs and half centers, as well as disks which have been used in connection with larger holes, etc.

The tool here spoken of is made throughout of tool steel, with the exception of the quadrant. The slots in the arms are broken by cross ribs, and the whole tool is a remarkably light and stiff device and one capable of being closed into the smallest possible space. This becomes an important factor when the tool is part of a toolmaker's kit.

Digitized by Google

GRINDING A TAPER REAMER

HAVING a taper reamer to grind $1\frac{1}{2}$ inches taper per foot and not having a gage of correct taper, the following method was resorted to, based on the belief that the high point of a taper is the only one which can be accurately measured.

A piece of cold-rolled stock *A*, Fig. 63, was cut off same length as the reamer. This piece was

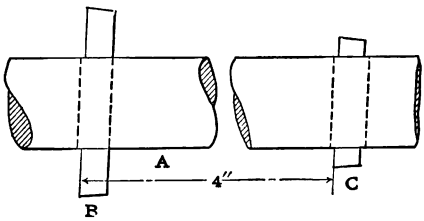

FIG. 63. — Method of Getting Correct Taper.

centered and two $\frac{5}{16}$ pins inserted as shown. The back side of pin *B* was then squared by grinding until there was a flat about $\frac{1}{8}$ inch wide. The front side of *C* was then squared and the distance over the outside of the pins measured with a vernier. The back side of *C* was then squared to a thickness to be exactly 4 inches from

Digitized by Google

back of *B*, as shown. *A* was then put in the grinder and the taper set by grinding the ends of the pins until the difference in diameter at high points was one-third the required taper — $\frac{1}{2}$ inch in this case. The reamer was then finished without altering the grinder.

By this method the whole job depends on a man's skill in making fine measurements, and if carefully done gives excellent results.

MAKING LEAD LAPS

We think a man can do more lapping in a day with a lead lap rightly handled than in two or three days with a piece of soft steel split, for the reason that steel will not charge or become imbedded with emery as lead will. We have a lead lap 0.078 inch in diameter with which we have opened fifteen bushings 0.0015 inch, and apparently it is in condition to do as many more. This lap was made on a piece of No. 53 wire about $1\frac{1}{2}$ inches long with the lead poured considerably larger to allow for turning to size. In turning down, one end of the wire is held in an

Digitized by Google

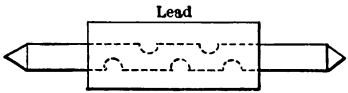

FIG. 64

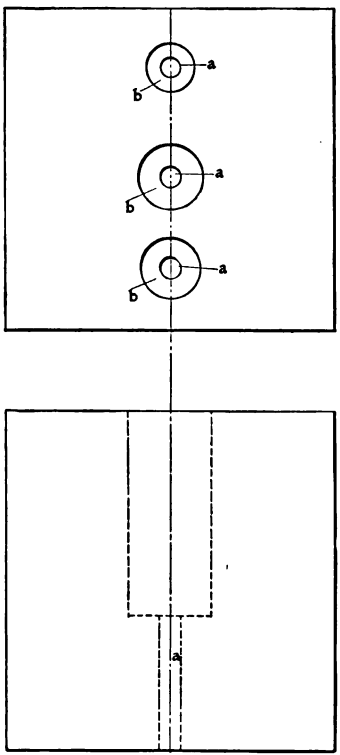

FIG. 65

FIGS. 64 and 65. — Mold for Lead Lap.

Digitized by Google

Almond chuck in the lathe spindle and the other end runs in a small female center held in another chuck in the tailstock spindle. With the wooden blocks shown in Fig. 65 and a small melting ladle, we are rigged for making all sizes of laps under ¼ inch. The hole at *a* must be just the diameter of the wire on which the lap is made, the hole at *b* being the size of the lap before it is turned. Now, when a small lap is wanted, if three or four wires are notched, as shown in Fig. 64, to hold the lead, and several laps are poured so that for the next few of nearly the same size it will not be necessary to stop to melt lead, the expedition with which the work can be done will surprise those who have been familiar with the method, and one who has gotten acquainted with lead lapping will not care to return to split steel rods. For work which is too small for a lead lap we find copper wire answers pretty well, as it holds emery better than brass.

Digitized by Google

LEAD LAPS

LEAD laps do not need to be renewed after each hole, but they will actually grow to keep pace with the hole if handled rightly. They also will lap small, long holes in cast iron, or the holes in a yoke or opposite sides of the frame for a small machine which can be finished by no other means as accurately as our work calls for.

In making a lap for a small number of holes, say six for the sake of exactness, my method is to make a free fit for the smallest piece, if there is any difference, bringing them up to the size of the larger holes, and carry the whole lot along together; 90 emery is good enough on a lead lap. Roll it in with an old flat file, bearing on hard enough to thoroughly bed the grains in the lead. By this method the lap can be "built up" and kept cutting in a manner which is surprising as well as effective.

Three or four spiral grooves cut in the lap with a hand tool, or by any other convenient method, will help the cutting qualities, by catching the chips and loose emery. Lead laps may

Digitized by Google

be made adjustable if desired by molding on a taper mandrel having a half-round groove in one side to keep the lap from turning. Turn the lap to size and split one side clear through to the mandrel, when it can be enlarged by driving the mandrel in farther, with the advantage of enlarging the entire length evenly.

MAKING SMALL LAPS

A LAP made of tubing is very good, but as tubing is not always to be had in all sizes and some shops may not have it at all, a good lap for drill jig bushings can also be made of common cold-rolled steel or drill rod, which comes in all sizes and is more likely to be in a shop where drill jigs are made. A piece of cold-rolled stock, sawed longitudinally through the center with a hacksaw, makes this lap; it can be adjusted by spreading the ends apart.

A CHEAP, QUICK LAP

A GOOD way to make a lap quickly and cheaply is to take a piece of steel or brass tubing of the

Digitized by Google

required diameter, and saw it about a third of the diameter through crosswise, about one or two inches from the end, then split it lengthwise into the cross slot. It can then be adjusted to suit the job. Of course, we know that this kind of a

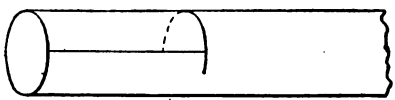

FIG. 66. — A Cheap Quick-Made Lap.

lap would not do for a very fine job, such as a ring-gage or similar work, but for drill-jig bushings and such work it is very satisfactory; if you don't think so, just try it. The sketch Fig. 66 will show it clearly.

SOME PREFER CAST-IRON LAPS

LAPS are getting to be more and more used in machine shops, and rightly, too. With a good lap you can make as good a hole as can be done on a grinder, and in less time. But you must have a good lap — not the poor excuses too often seen.

Digitized by Google

Good laps can be made of cast iron, solid for small holes, and they can be cored out and lightened for larger ones, with steel plugs put in the ends for centers. After turning them to size, making them about one and a half times the length of common arbors of the same diameter, cut a saw slot to within about 1 or $1\frac{1}{2}$ inches

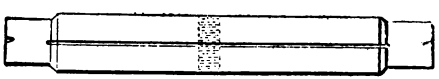

FIG. 67. — Adjustable Lap.

from each end from both sides. Drill a hole across in the middle, tap and put in two blind screws, one from each side, so that when the points touch they will be below the surface. This lap will last for years, and is always the right size. Always use flour emery; it makes the quickest and best job.

Digitized by Google

DIAMOND DUST FOR LAPS AND SAPPHIRES FOR CUTTING TOOLS

THE two above-named precious stones are extensively used in the making of small tools of precision, and as their use in connection with methods for accomplishing work is not widely known, a little information in this particular line may be of interest.

The use of the diamond in mechanical work is more extensive. The tool-room that does not possess a little black diamond for dressing its emery wheels is a poor one indeed, but this cannot be said about the majority of tool-rooms which do not keep the diamond in pulverized form, because often their class of work does not warrant it; but we have been in places where, if such an article as diamond dust were at hand, it would have facilitated matters very much, and paid for itself twofold both in manipulation and results — on certain jobs.

This diamond dust comes in small vials and is classified by numbers, No. 1 being coarse and as the numbers proceed the dust becomes finer. It

Digitized by Google

is essential to assign certain numbers to certain classes of work, just as different grades of emery are assigned to different classes of work.

Watch-tool work demands the use of this diamond dust, although there are many other classes of work on which it is extensively used.

For grinding out very small holes which may range from .025 to .250 in diameter, the diamond-charged lap in connection with a traverse grinder on a bench lathe cannot be equaled. A lap of this kind is entirely different from an emery lap, as will be seen in Fig. 68. It is made of mild steel and has a taper shank which fits into the spindle of traverse grinder. Soft metal for such a lap is desirable for the reason that it can be charged far more easily than if it were hard. The part of lap which is to be charged is marked *A*. This charging is readily done by taking two pieces of steel which have been hardened very hard, surface one side of each piece, then by holding one piece in a vise with its surfaced side up and placing thereon a little diamond dust which has previously been mixed with a drop of good oil, then rolling lap between these two

Digitized by Google

hardened pieces of steel, the diamond will be forced into the lap; the more it is rolled the better the lap is, as it forces the diamond dust

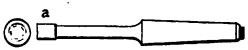

FIG. 68

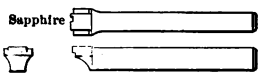

FIG. 75

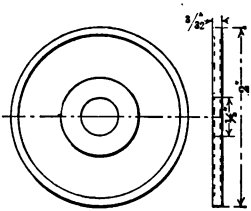

FIG. 71

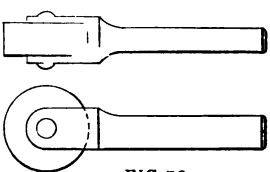

FIG. 72

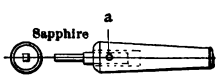

FIG. 74

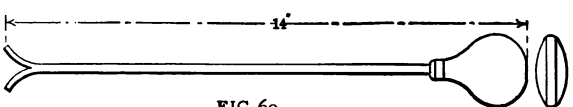

FIG. 69

Diamond Dust for Laps and Sapphires for Cutting Tool.

further into lap. A lap of this description does its grinding the same as an internal emery wheel, just grinding that part of hole which runs eccen-

Digitized by Google

tric, not following the hole the same as an ordinary emery lap does.

One of the most essential items to be observed when doing this grinding is not to force matters, especially if the lap is of a very small diameter, as lap will tend to follow irregularities of hole and result will be unsatisfactory. The lap should just hit the high spots in hole and gradually grind them off. By placing a screw-driver or some such tool against the grinder's foremost bearing, at the same time holding handle of same against one's ear, the sound when the lap first comes in contact with work can be readily detected.

A more suitable tool for this purpose is shown in Fig. 69, it being termed a "Harker"; it is nothing more than a piece of No. 30 drill rod inserted into a little piece of wood which is finished off to a suitable shape to hold against one's ear, the other end of rod being split and spread fork shape so that it can be rested against the spindle or frame of grinder. When grinding we found if lap is kept well lubricated with kerosene oil it will cut much freer and faster.

Digitized by Google

When doing this class of work it often happens that one must handle it entirely different from a larger piece. For instance, a piece of work 2 inches in diameter has a hole .040 in diameter; both must be accurately concentric with each

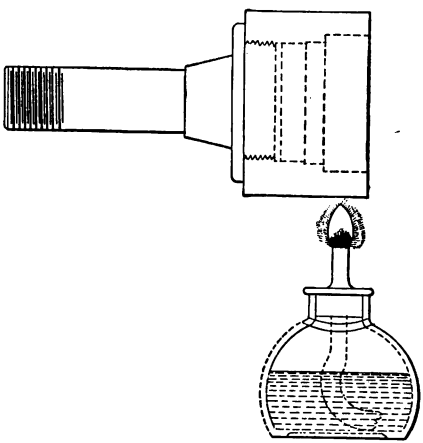

FIG. 70. — Expanding a Chuck.

other. Of course, if this were a larger hole we would grind hole first and then place the piece on a true arbor and grind the outside, but this method would not be feasible in this case, as the arbor required would be too small. To accomplish

Digitized by Google

work of this nature, we start by making a screw chuck which fits into head of bench lathe, as shown in Fig. 70; on to this chuck is screwed a piece of brass which is a little larger than the diameter of work to be held; placing chuck with brass on in position, bore it out to a snug fit for work (it should be understood that the work has been previously ground outside), then take a small alcohol lamp and hold it underneath the brass, warming it; this will allow the piece to be placed in position with ease. Remove the lamp and place a damp piece of cloth on the brass; this shrinks the brass and holds the piece secure and accurately. To release the work, heat the brass as before, and work can be readily slipped out and another piece put in, if there should be any more such pieces. Any one who has never tried this method may think it a slow way, but it would surprise him should he try it, as very little warmth is required to make brass expand enough for this purpose. If the periphery of the piece that was being held was out of round, then of course this method would not do. This method is superior both for accuracy and speed

Digitized by Google

to either solder or beeswax. Another style lap which is quite extensively used is shown in Fig. 71; this is nothing more than a soft steel disk with its sides undercut. A lap of this kind is mostly used on a surface grinder for finishing out corners on small intricate tool work where an emery wheel would be useless.

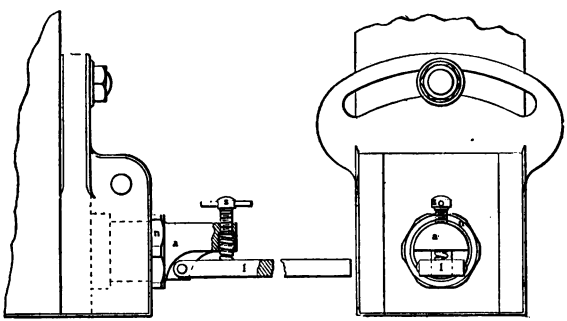

FIG. 73. — Lapping in the Shaper.

For charging this lap the roller shown in Fig. 72 is utilized; this roller is made as hard as possible, and is held in a fork-shaped tool, which in turn can be held in the tool-post of the bench lathe. The lap is placed on an arbor which is held between centers of lathe. A little diamond mixed

Digitized by Google

with oil is then distributed around the lap and the roller brought to bear against it, by the revolving lap the diamond is forced to imbed itself in the lap, repeating this until the lap is satisfactorily charged. The shaper also plays a prominent part in lapping out flat surfaces which are located in the side of a hole such as a die which has to be made accurate to size. The accompanying sketch, Fig. 73, shows the construction of such a device. The stud *A* takes the place of the tool-post; it is held in position by the threaded nut *n*, forward part of *a* is milled out to form a tongue, on to which the gray-iron lap *l* fits; a ¼-inch dowel which is a running fit in *a* lets *l* adjust itself in position. The length of lap is governed by its width and thickness, care being taken not to get the lap too long, as then it will spring and cause a convexed surface. The screw *S* has a piece of drill rod through its head which allows it to be adjusted; while machine is in motion it bears against a small disk, which in turn bears against a spring which serves to give pressure on the lap; by adjusting screw *S* up or down, different pressures are obtained on

Digitized by Google

the lap. Both sides of this lap may be charged; for accomplishing this, the roller shown in Fig. 72 is utilized, a handle is placed on the shank of the roller and the diamond distributed upon the lap; it is then rolled in with as much pressure as one can exert.

When dimensions of lap are large enough to allow a 10- or 12-inch stroke on the shaper to be had, then emery or carborundum is a very good substitute for diamond and less expensive.

Of course it will be noticed that it is very essential to have the working face of the lap travel on a true plane with the ram of the shaper to insure accuracy.

Leaving the diamond we now turn to the sapphire, which is another precious stone which is handled quite extensively on very small tool work; this stone we have made and seen made into reamers, forming tools, and applied to many other different tools. Of course, when we speak of reamers, it may seem to some absurd, but when we consider that they were only .040 in diameter and $\frac{3}{16}$ inch long it may look more reasonable. These reamers were made square,

Digitized by Google

which gave the flutes, and also round with cutting teeth same as a rosebit; they were used to finish out a hole which had to be accurate to size and in very tough phosphor bronze of the hardest kind; the amount they were made to ream out of a hole varied from .001 to .0015. Steel reamers were used before these, but would lap under size in a few minutes. The sapphires stood up very nicely. They were ground up with the aid of a diamond-charged circular lap, this lap being the same as one shown in Fig. 71, only smaller, it having a $\frac{1}{32}$ inch face and $1\frac{1}{4}$ inches diameter. The reamer was held in a steel socket by means of jewelers' cement, which in turn was held, as shown in Fig. 74, in the taper shank by dowel *a*, it being allowed to float in position.

The sapphire forming tools which were of very small dimensions were held as shown in Fig. 75, these formers only acting as a sizer for a shoulder which had to be very accurate. The stock turned was soft steel and a steel tool preceded the sapphire. They were ground to shape in a surface grinder with the aid of a circular diamond-charged lap. Care must be taken when doing

Digitized by Google

this kind of grinding to take a very small cut.

There was another purpose for which sapphires answered very well, on account of their hardness and smoothness, they being set in the jaws of a special steady-rest which was used on a manufacturing job. One sapphire was set in the business end of each jaw, of which there were three; these were then ground with the aid of a diamond lap to the true circle of the work which they were about to hold. For this special job they stood up remarkably well, being superior to anything that had been tried before.

HOW TO CHARGE A LAP — A PROVED SURFACE LAP AND STRAIGHT-EDGE

A SURFACE lap, to most mechanics, is a tool to be abused, judging by the way they charge it. A lap to be of good service must be charged in such a way that it will cut fast and finish the work acceptably. Acceptably means a finish proper for shop gages. When you have tried this way of charging, and see a lap roughing and

Digitized by Google

then finishing a surface of hardened steel, until it looks like blue sky, you may be sure the standard of finish is high enough for any shop.

The surface of a lap once charged by force, either rubbing or rolling, has received all it can; you sprinkle more abrasive on and force it where? between the particles that are embedded. True, you displace some of the old abrasive and renew it with fresh, but to do it you must use considerable force, and that is what we mean by abuse.

The use of a roller for charging is not so bad as a rubbing block of gray iron: the block allows the abrasive to roll and rub, get dull, and cut both lap and block. Just look at that charging block and see the condition of its former flat face, then you may acknowledge that what caused that can't be very good for a true flat surface, which a lap must have to do good work and keep the man from guessing whether it is the fault of steel or lap that that work is in such shape — its corners and edges all gone, or its surface convex or concave.

The actual wear on a lap is so small when charged in the way about to be described that

Digitized by Google

in a test we could not decide whether it was wear or natural changes in the iron, the laps being from new castings; so we took one and resurfaced it and we used it every day lapping small work for more than a year, and before leaving for another place trued up my tools on it and it stood the same test as when first made.

The foregoing refers to gray-iron laps. Keep the roller off of lead laps; they roll the edges down and make the lap very crowning.

Just a small squirt of kerosene, a little 15-minute carborundum or flour of emery, enough benzine or gasoline to spread the abrasive and kerosene over the surface, using a block of hardened steel (we use an old press die 3 x 4 x $\frac{3}{4}$ inch) once in a while to gray the glassy surface which does not hold the abrasive properly. For all other charging, just use a piece of cheese cloth rolled up like a shredded biscuit and rub lightly, using the kerosene and gasoline.

The first thing to look for is a surface on the lap that looks as if the work were plowing; you will lose your edges and corners if it does plow, and you will know then that you have used too

Digitized by Google

much kerosene. Just a little more gasoline will cure that. Then you will have a lap that will cut and you will be surprised how little fresh abrasive it takes to keep it cutting. That cheese cloth seems to hold a lot more; but you put a little more on out of pity for the abrasive manufacturers, not that it seems to need it to cut. We have wondered if the steel particles lapped off of the work didn't cut and help out.

That lap will not gather little glazed spots, or "birds' eyes," as they are called, and you will have edges and corners in the surface plane. Just as soon as it gets dry repeat the process without the rubbing block; use that only once in a while, and you will always have a coat of *stationary* abrasive between the work and lap. When the work finishes dull and the lap becomes gummed, take a fresh fold in your cheese cloth.

We use lead laps for lapping gray iron or composition brass, where the parts to be lapped are not used as bearings subject to wear.

Our laps are annealed solid castings $2\frac{1}{2}$ x 10 x 12 inches, of fine-grained gray iron, and must be soft and compact. They are planed on top and sides,

Digitized by Google

but without grooves or checks (which are fallacies to me), then scraped to a surface plate, keeping the spots close together. When a good, close-spotted surface is obtained we blend the spots by placing one lap on top of the other — with 120 emery and kerosene between — and grinding them together (this shows up the effect of rolling force). Then they are tested in this way, which originates a practical straight-edge also.

In Fig. 76 piece *A* is a straight-edge $\frac{1}{16}$ inch thick at the edge, hardened about $\frac{1}{4}$ inch back on that edge. Rub it on the lap about to be tested, holding it against a parallel to keep it flat on the $\frac{1}{16}$ face, and go all over the lap; now you have the opposite of the face of the lap. Now take a knife-edge straight-edge the same length as at *B*, lap it up (without the parallel) covering the same lap surface, which duplicates the lap surface again. Now place the edges together as shown, and you will have twice the error of the lap if there is any. The light showing in the center of the straight-edges, the laps are crowning; if open at the ends, the laps are hollowing. Take the concave laps, sprinkle the 120 emery evenly on

Digitized by Google

the edges and rotate the top one, when placed together flat, in a complete circle. Look out for emery working into the center where you don't want it to cut. Do likewise with convex laps,

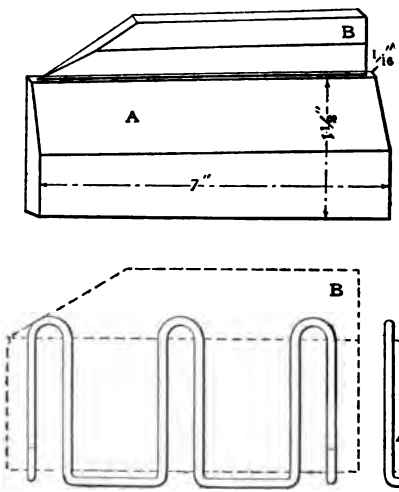

FIGS. 76 and 77. — Testing a Straight Edge.

using emery in the center and keeping it away from the edges. A block of gray iron 5 x 5 x 1 inch makes a good rubber to start the convex laps in the right spot or to correct spots.

Fig. 77 is a rest to hold *B* on the face of *A*.

Digitized by Google

It is made of No. 30 wire bent up and extending above *A* far enough to allow *B* to rest against it when *A* is in the loop at the bottom.

That's the way we made laps in a certain room. There were eight of us and there was a lap for every man, and he finished a glass test bar for straight-edges for himself; knife-edge squares were as common as beam squares; a right angle was as easy to create as a straight-edge on these laps. It must be understood that this way of charging does not apply to the precious stones as abrasives.

A few points to keep in mind: A lap flooded with oil and abrasive will not cut hardened steel as fast as one which is charged with just what abrasive will cling to the surface of the lap. Rolling abrasive crushes the lap surface and fills into low places in the work, which causes more lapping, for it cuts where you don't want it to.

Digitized by Google

Digitized by Google

INDEX

PAGE

Adjustable and renewable gages 6
V block 11

Box for twist drills 5

Cast-iron laps 71
Center gage for lathes 52
indicator for lathe 17
punch, spacing 15
Charging a lap 83
Cheap laps 70
Clamp, toolmakers' 60
Counterbores 28

Depth gage 44
Diamond dust for laps 73
Dividers for small circles 16

Gage, a handy scratch 24
attachments for hight 49
depth 44, 46, 47
surface with micrometer 26
taper 53
Gages, micrometer 33
protecting the ends of 8

Digitized by Google

PAGE
Gages, renewable and adjustable 6
Glass test bar 89
Graduations for micrometers and scales 40
Grinding a taper reamer 65

Hight gage, attachment for 49
Holders for small tools 54
How to know steel 1

Indicator for lathe 17
Inside measuring devices 58

Jigs, tool for locating holes in 61

Lap, a proved surface 83
  charging a 83
Laps, cast-iron 71
  cheap and quick 70
  diamond dust for 73
  making lead 66, 69
  small 70
Lathe center gage 52
  center indicator 17
Lead laps, making 66, 69

Measuring small holes 58
Micrometer gages 33
  graduations 40
  head trammel 3
Mills and counterbores 28

Protecting plug gage ends 8

Digitized by Google

PAGE
Proved straight-edge 83
surface lap 83

Reamer, grinding a taper 65
Renewable gages 6

Sapphires for cutting tools 73
Scale graduations 40
Scratch block for toolmakers 22
gage, a handy 24
Scriber, a handy 19
Setting tool for snap gages 11
Small laps 70
tool-holder for bench lathe 54, 56
Spacing center punch 15
Spring-adjusted tram 2
Square for surface work 9
Steel, how to know it 1
Straight-edge, a proved 83
edges, truing 42
Surface gage with micrometer 26
lap, a proved 83
square 9

Taper gage 53
Test bar of glass 89
Testing tool for fine work 18
Tool for locating holes in jigs 61
for setting snap gages 11
for testing fine work 18
Toolmakers' clamp 60
scratch block 22

Digitized by Google

PAGE

Tram, spring-adjusted 2
Trammel with micrometer head 3
Truing straight-edges 42
Twist drill box 5

V block, adjustable 11

Digitized by Google

HAVE YOU THESE?

Practical Planer Kinks. By CARROLL ASHLEY. 80 pages, 5 x 8, 34 illustrations. $1.00 postpaid.

Dimensions and Weights of Pipe and Fittings. 11 x 8. $.50 postpaid.

The Electrical Catechism. Compiled by the *Power* editors from *Power*. 5¾ x 7⅞, 246 illustrations. $2.00 postpaid.

Manufacture and Properties of Iron and Steel. By HARRY HUSE CAMPBELL. Entirely revised in 1907, 641 pages, 6 x 9, cloth. $5.00 postpaid.

Precision Grinding. By H. DARBYSHIRE. 6 x 9, cloth, fully illustrated. $2.00 postpaid.

Steam Turbines. By LESTER G. FRENCH. 340 pages, 6 x 9, cloth, fully illustrated. $3.00 postpaid.

Engine Room Chemistry. By PROF. AUGUSTUS H. GILL of the Massachusetts Institute of Technology. 4½ x 6½, fully illustrated. $1.00 postpaid.

Eminent Engineers. By DWIGHT GODDARD. 280 pages, 5 x 8. $1.50 postpaid.

Combustion and Smokeless Furnaces. By JOSEPH W. HAYS. 112 pages, 6 x 9, illustrated. $1.50 postpaid.

The Compound Engine. By F. R. LOW, editor of *Power*. 48 pages, 6 x 9, 37 illustrations. $.50 postpaid.

Digitized by Google

Condensers. By F. R. Low, editor of *Power*. 80 pages, 6 x 9, 23 illustrations. $.50 postpaid.

The Steam Engine Indicator. By F. R. Low, editor of *Power*. 208 pages, 6 x 9, illustrated. $1.50 postpaid.

Questions and Answers from the American Machinist. Compiled by FRANK RICHARDS. 420 pages, 5 x 7. $1.50 postpaid.

Chordal's Letters. By JAMES W. SEE. 396 pages, 5 x 8, 32 illustrations. $2.00 postpaid.

The Design and Construction of Cams. By C. F. SMITH, F. A. HALSEY, and others. 70 pages, 9 x 12, fully illustrated. $3.00 postpaid.

Things that Are Usually Wrong. By PROF. JOHN E. SWEET. 52 pages, 5 x 8, 50 illustrations. $.50 postpaid.

Grinding and Lapping. Tools, Processes and Fixtures. By JOSEPH V. WOODWORTH. Author of "*Dies*," "*Punches, Dies and Tools*," "*American Tool-Making and Interchangeable Parts*," etc., etc. 200 pages, 6 x 9, fully illustrated. $2.00 postpaid.

HILL PUBLISHING CO.

505 PEARL STREET, - - NEW YORK
6 BOUVERIE STREET, - - LONDON, E. C.

The Engineering and Mining Journal, Power, American Machinist

Digitized by Google

Digitized by Google

Digitized by Google

Digitized by Google

89089662530

B89089662530A

pt

'EEN DAYS

l below. A fine of TWO CENTS
ach day the book is kept over

Digitized by Google

TDH
.C72
.T

Digitized by Google

8908966253O

b89089662530a

Digitized by Google